The Izze-Racing infrared sensor is specifically designed to measure the highly transient surface temperature of a tire with spatial fidelity, providing invaluable information for chassis tuning, tire exploitation, and driver development.

Each sensor is capable of measuring temperature at 16, 8, or 4 laterally-spaced points, at a sampling frequency of up to 100Hz, object temperature between -20 to 300˚C, using CAN 2.0A protocol, enclosed in a compact IP66 rated aluminum enclosure, and priced to be affordable to all tiers of motorsport.

The sensor is now offered as a complete kit for any data acquisition system that can log CAN messages. The kit includes four 4, 8, or 16-channel infrared tire temperature sensors with wide (60˚) or ultra-wide (120˚) field-of-views and a complete motorsport-grade wiring harness.

SENSOR SPECIFICATIONS

Temperature Measurement Range, T_o	-20 to 300˚C
Package Temperature Range, T_p	-20 to 85˚C
Accuracy (Central 10 Channels, Nominal) (16-Ch Sensor)	±1.0˚C T_{sensor} < 50˚C ±2.0˚C T_{sensor} > 50˚C
Accuracy (First & Last 3 Channels, Nominal) (16-Ch Sensor)	±2.0˚C T_{sensor} < 50˚C ±3.0˚C T_{sensor} > 50˚C
Noise Equivalent Temperature Difference, NETD	0.5˚C 16Hz, ε = 0.85, T_o = 25˚C
Field of View, FOV	60˚x 8˚ (IRTS-60-V2) 120˚x 14˚ (IRTS-120-V2)
Number of Channels	16, 8, or 4
Sampling Frequency	100, 64, 32, 16, 8, 4, 2, or 1Hz
Thermal Time Constant	2 ms
Effective Emissivity	0.01 to 1.00 (default = 0.85)
Spectral Range	8 to 14 µm

ELECTRICAL SPECIFICATIONS (SENSOR)

Supply Voltage, V_s	5 to 8 V
Supply Current, I_s (typ)	30 mA
Features	• Reverse polarity protection • Over-temperature protection (125˚C)

MECHANICAL SPECIFICATIONS

Weight	< 18.0 g
L x W x H (max, 60˚ FOV)	37.6 x 26.0 x 12.3 mm
L x W x H (max, 120˚ FOV)	32 x 29.0 x 12.3 mm
Protection Rating	IP66

CAN SPECIFICATIONS

Standard	CAN 2.0A (11-bit identifier), ISO-11898
Bit Rate	1 Mbit/s
Byte Order	Big-Endian / Motorola
Data Conversion	0.1˚C per bit, -100˚C offset, unsigned
Base CAN ID's (Default)	LF Sensor: 1200 (Dec) / 0x4B0 (Hex) RF Sensor: 1204 (Dec) / 0x4B4 (Hex) LR Sensor: 1208 (Dec) / 0x4B8 (Hex) RR Sensor: 1212 (Dec) / 0x4BC (Hex)
Termination	None

CAN ID: Base ID

Channel 1		Channel 2		Channel 3		Channel 4	
Byte 0 (MSB)	Byte 1 (LSB)	Byte 2 (MSB)	Byte 3 (LSB)	Byte 4 (MSB)	Byte 5 (LSB)	Byte 6 (MSB)	Byte 7 (LSB)

CAN ID: Base ID+1

Channel 5		Channel 6		Channel 7		Channel 8	
Byte 0 (MSB)	Byte 1 (LSB)	Byte 2 (MSB)	Byte 3 (LSB)	Byte 4 (MSB)	Byte 5 (LSB)	Byte 6 (MSB)	Byte 7 (LSB)

CAN ID: Base ID+2

Channel 9		Channel 10		Channel 11		Channel 12	
Byte 0 (MSB)	Byte 1 (LSB)	Byte 2 (MSB)	Byte 3 (LSB)	Byte 4 (MSB)	Byte 5 (LSB)	Byte 6 (MSB)	Byte 7 (LSB)

CAN ID: Base ID+3

Channel 13		Channel 14		Channel 15		Channel 16	
Byte 0 (MSB)	Byte 1 (LSB)	Byte 2 (MSB)	Byte 3 (LSB)	Byte 4 (MSB)	Byte 5 (LSB)	Byte 6 (MSB)	Byte 7 (LSB)

WIRING SPECIFICATIONS (SENSOR)

Wire	26 AWG M22759/32, DR25 jacket
Cable Length (typ.)	500 mm
Connector	Deutsch DTM 4P (gold contacts)

Supply Voltage, V_s	Red
Ground	Black
CAN +	Blue

SENSOR CONFIGURATION:

To modify the sensor's configuration, send the following CAN message at 1Hz for at least 10 seconds and then reset the sensor by cycling power:

CAN ID: Current Base ID

Programming Constant		New CAN Base ID (11-bit)		Emissivity	Sampling Frequency		Channels	Bite Rate
Byte 0 (MSB)	Byte 1 (LSB)	Byte 2 (MSB)	Byte 3 (LSB)	Byte 4	Byte 5		Byte 6	Byte 7
30000 = 0x7530		1 = 0x001 ⋮ 2047 = 0x7FF		1 = 0.01 ⋮ 100 = 1.00	1 = 1Hz 2 = 2Hz 3 = 4Hz 4 = 8Hz	5 = 16Hz 6 = 32Hz 7 = 64Hz 8 = 100Hz	40 = 4 Ch 80 = 8 Ch 160 = 16 Ch	1 = 1 Mbit/s 2 = 500 kbit/s 3 = 250 kbit/s 4 = 100 kbit/s

CAN messages should only be sent to the sensor during the configuration sequence.
DO NOT continuously send CAN messages with the same Base CAN ID to the sensor.

DIMENSIONS:

60˚ Field-of-View, IRTS-60-V3

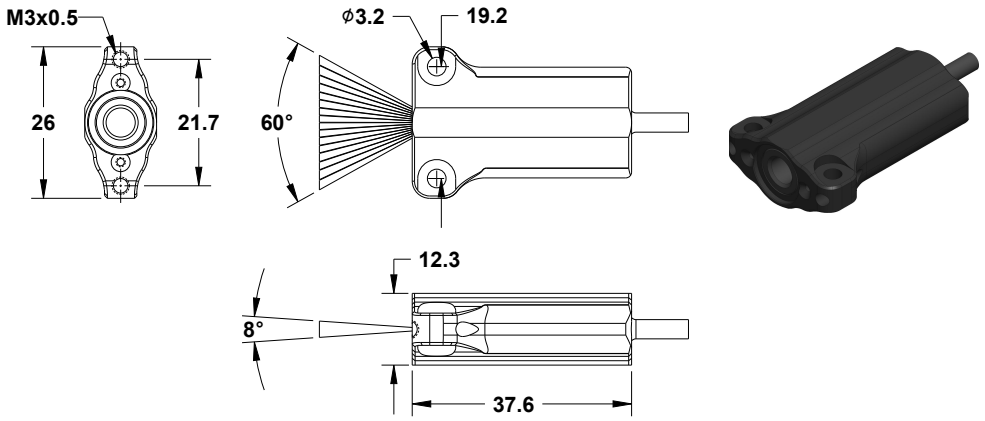

120˚ Field-of-View, IRTS-120-V3

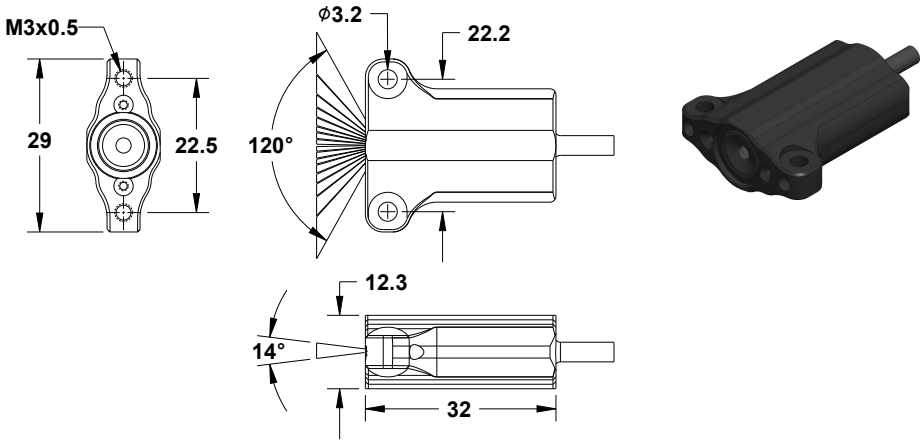

60˚ Field-of-View, IRTS-60-V3:

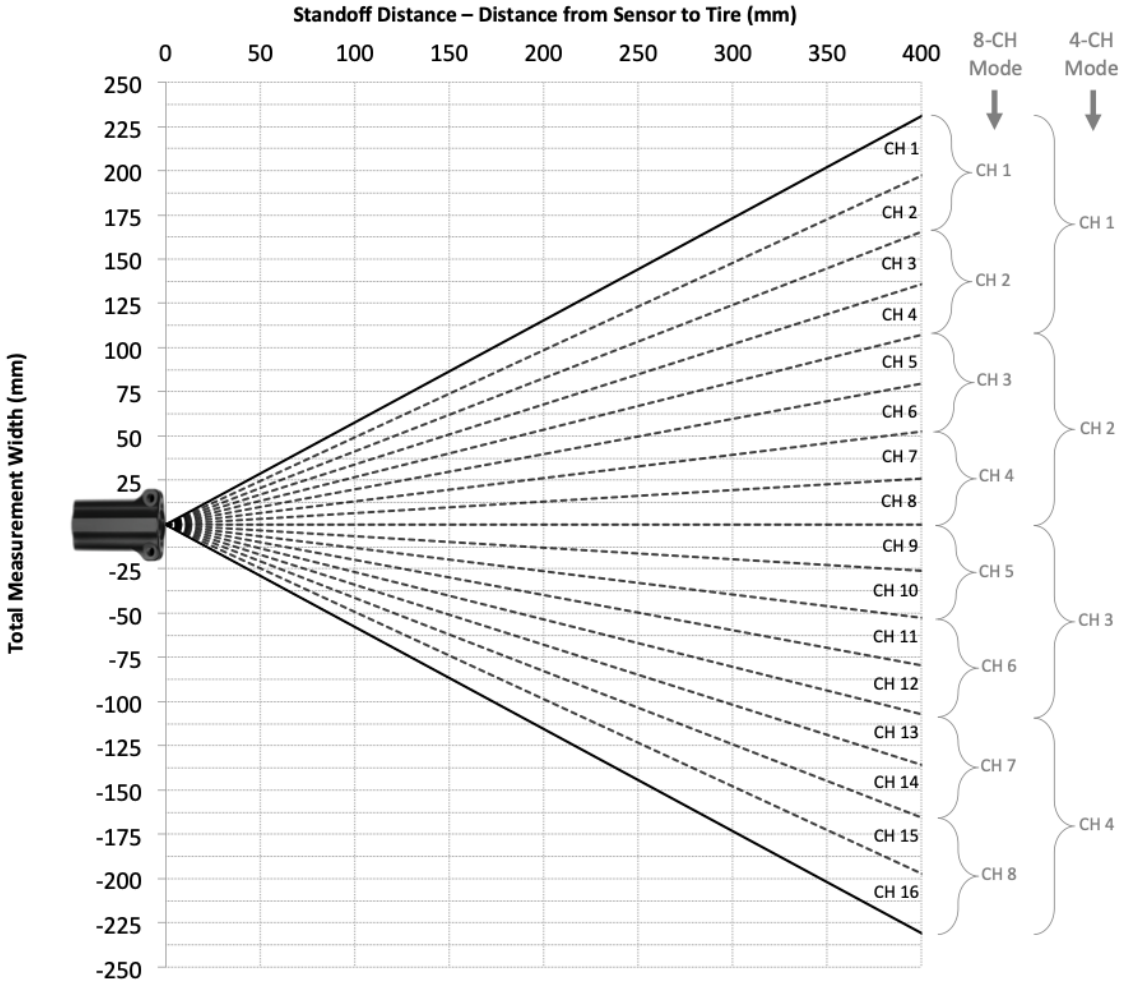

(Angle offset, z-axis rotation, between -5˚ and +5˚, mounts should allow adjustment accordingly)

120˚ Field-of-View, IRTS-120-V3:

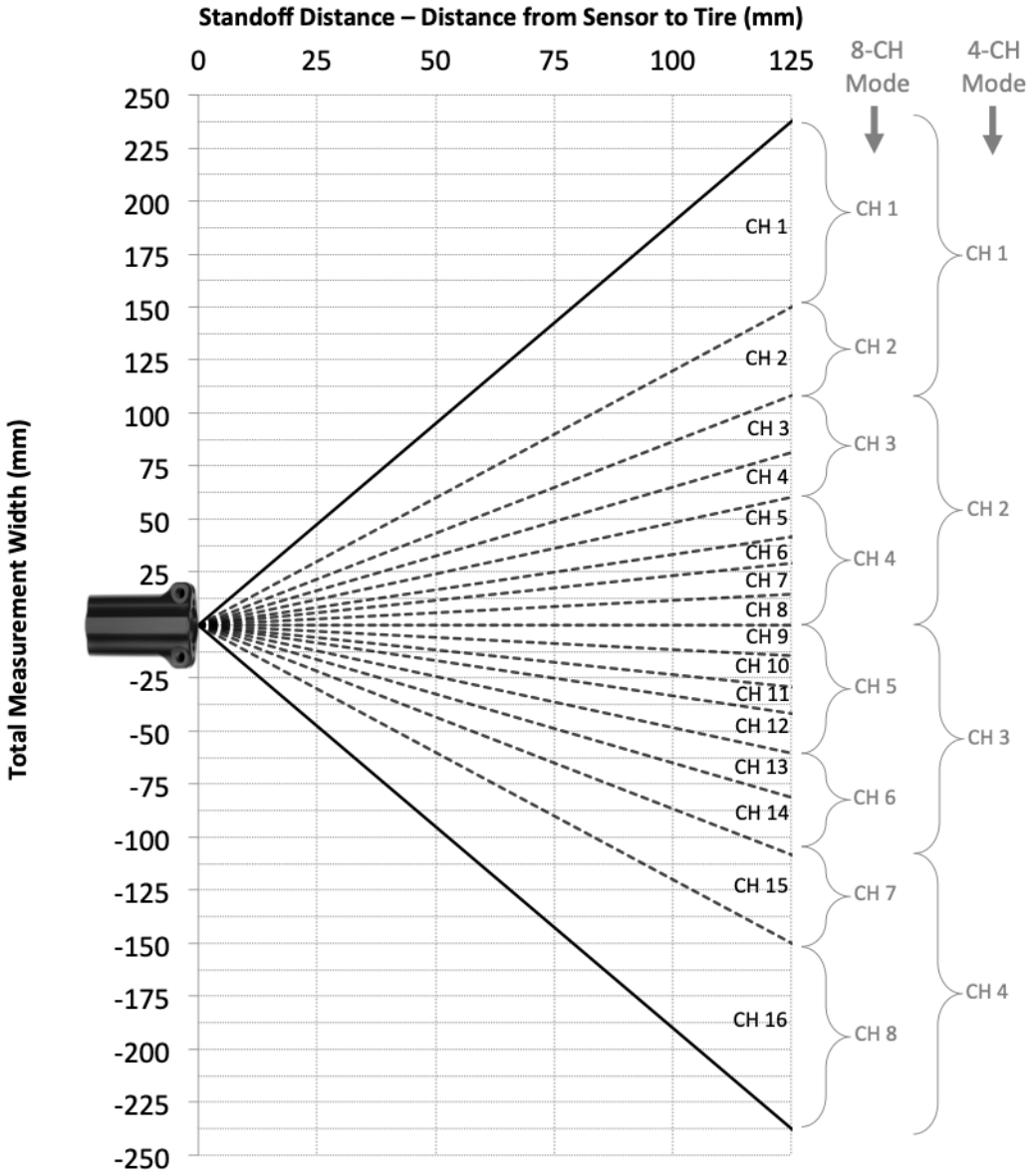

(Angle offset, z-axis rotation, between -5˚ and +5˚, mounts should allow adjustment accordingly)

WIRING SPECIFICATIONS (HARNESS):

Wire	22 AWG M22759/32, DR25 jacket, ATUM boots
Cable Length (typ.)	1.8-2.1m trunk segments, 0.5m branches
Connectors	Deutsch DTM 4P (gold contacts)

Supply Voltage, V_s	Red	(Pin 3)	(twisted)
Ground	Black	(Pin 4)	
CAN +	Blue	(Pin 2)	(twisted)
CAN -	White	(Pin 1)	

- The default wiring harness layout is shown in the first diagram below and is designed for data loggers <u>without</u> an internal CAN terminating resistor (MoTeC, Cosworth, Bosch, Stack, 2D, AEM, RaceCapture/Pro systems).
    - The harness can be modified upon request for data loggers with an internal CAN terminating resistor (AiM systems). The layout of this harness is shown in the second diagram below.
- The harness needs to be powered with 5-8 volts (120mA) but may be extended to 6.5-36 volts upon request.
- The CAN terminating resistors are integrated into the short Deutsch DTM connectors. Resistor value is 120Ω.
- Female pins for MoTeC Tyco/AMP Superseal connectors or female pins (38943-22) for AS Deutsch Autosport connectors (e.g., AS620-35SN connector for C185, C187, L180, ADL/EDL) may be added to the flying leads for the data logger upon request.
- Additional CAN sensors (strain gauge amplifiers, brake temperature sensors, etc.) may be added to the harness by using a y-harness at each corner.
- Harness lengths may be modified upon request. Please contact us if you would like to modify the wiring harness / kit; we are glad to accommodate your specific requirements.

DEFAULT WIRING HARNESS LAYOUT:
(Data logger without internal CAN terminating resistor)

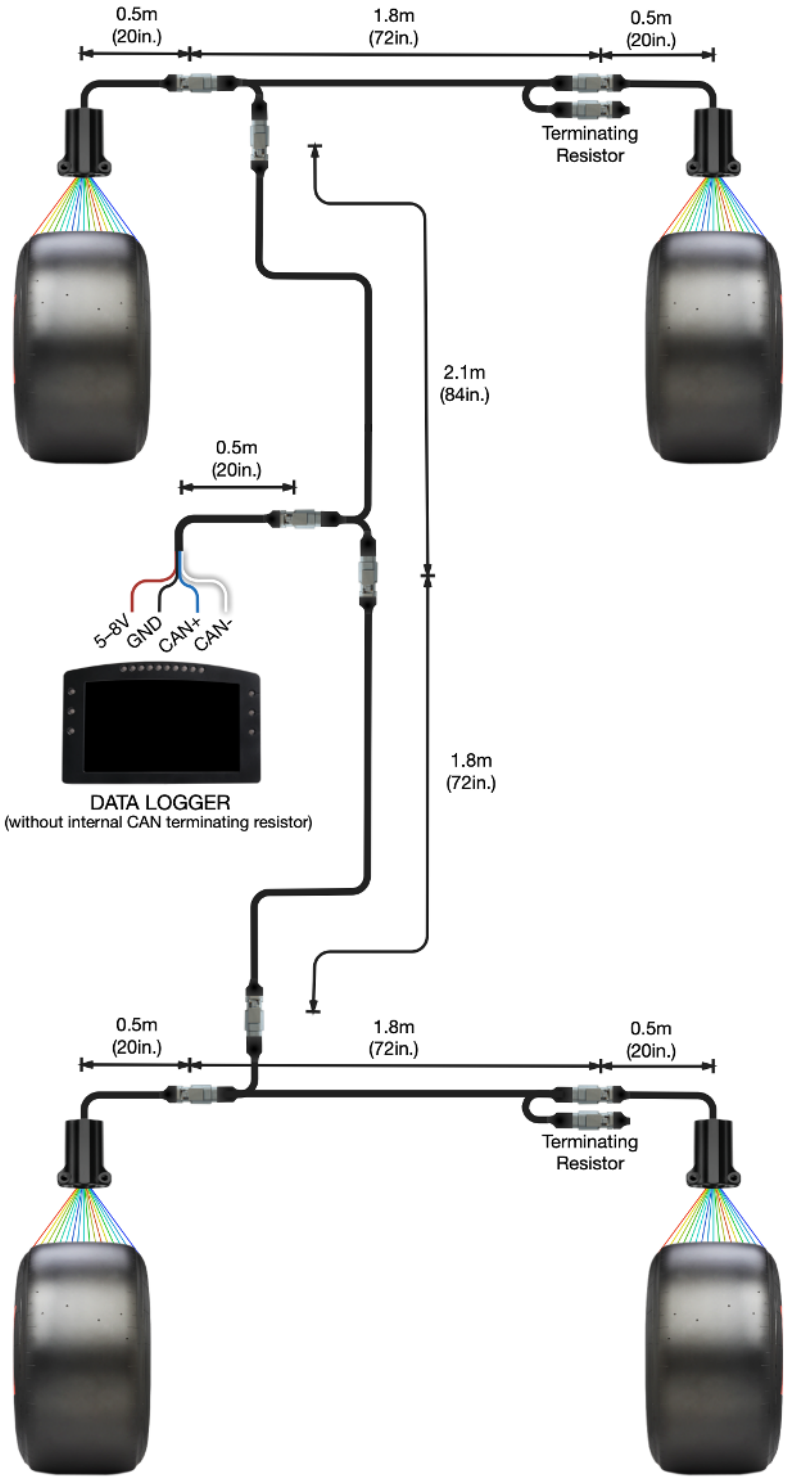

ALTERNATIVE WIRING HARNESS LAYOUT:
(Data Logger with internal CAN terminating resistor)

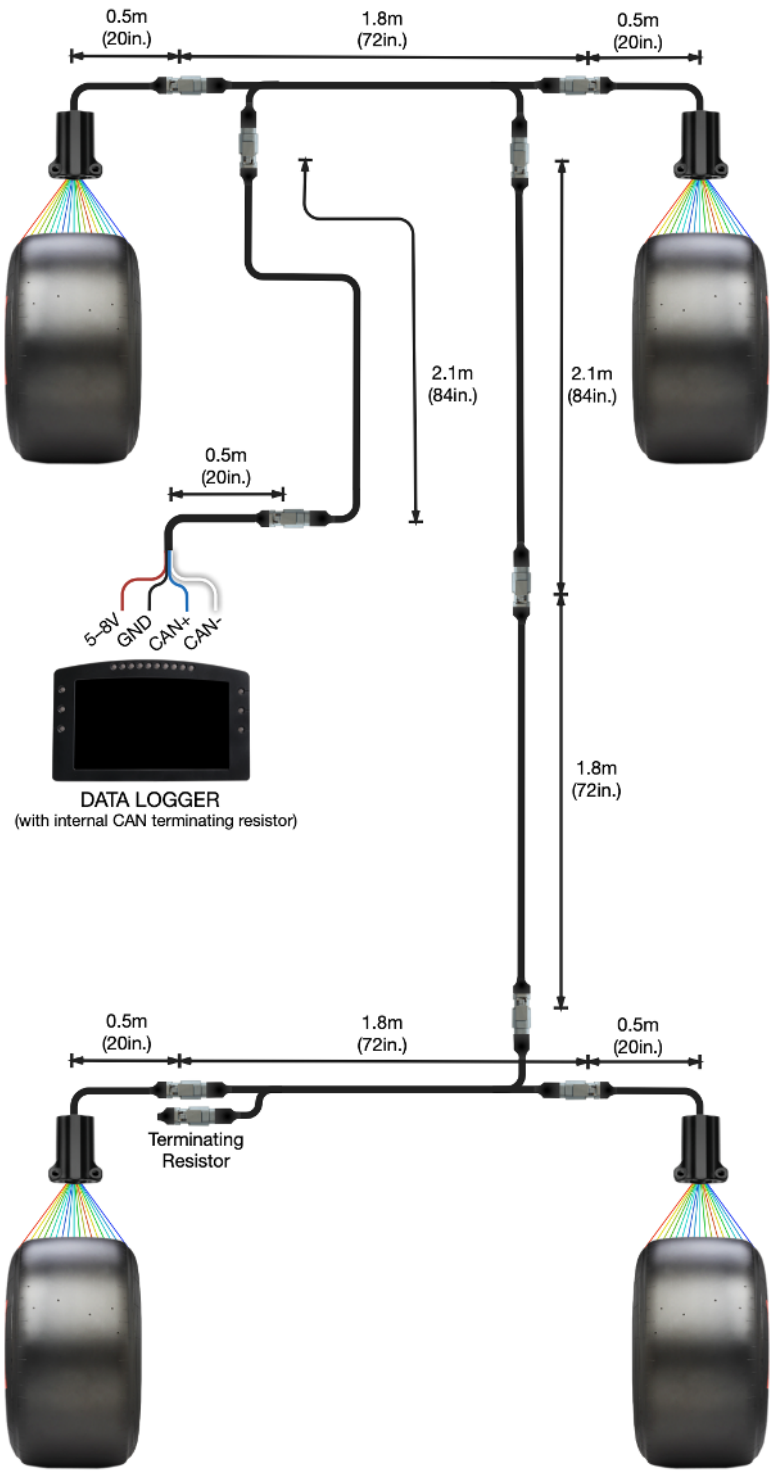

FRONT FACE MOUNTING, IRTS-120-V3:

- With the IRTS-120-V3, care has to be taken when mounting from the front face holes given the wide width (120˚) of the infrared temperature channels. If the mounting bolt standoff from the front face is greater than 3mm, then it will partially block temperature channels 1 and 16.
- It's recommended to use M3 x 0.5 flat head bolts with a 90˚ countersunk hole to keep bolt-to-face standoff distances < 3mm.
- If this cannot be prevented, ignore temperature readings from CH1 and CH16.

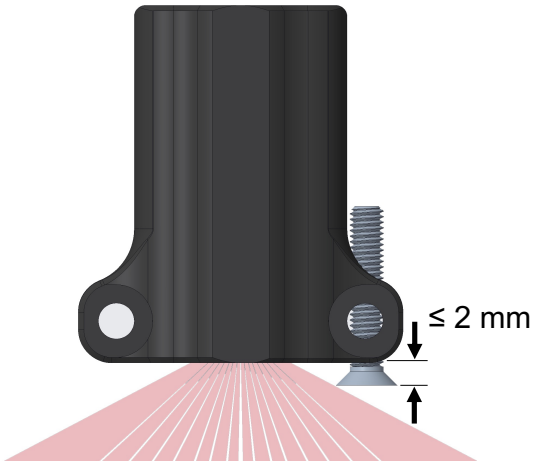

GERMANIUM PROTECTIVE WINDOW, IRTS-GE-V1:

- A Germanium protective window is available for applications subjected to impinging debris (e.g., sensor placed behind tire).
- The widow is specifically designed for the IRTS sensor to achieve superior accuracy with minimal IR signal attenuation.

  ⓘ The effective emissivity is lowered by 10% with the widow installed

  - Default emissivity, window installed = 0.75 (IRTS-120-V3), 0.68 (IRTS-60-V3)

- The window mounts with two #00 Philips screws.

  ⓘ Screws require blue thread locker

  ⚠ Lightly torque screws, excessive torque could crack window

ADDITIONAL INFORMATION:

- Stated accuracy is under isothermal package conditions; for utmost accuracy, avoid abrupt temperature transients and gradients across the sensor's package.

- Point the sensor in the downstream direction (facing front of tire) to avoid contamination, pitting, and/or destruction of the sensor's lens from debris. Germanium protective windows are available as an optional extra for protection and upstream facing applications.

- The *effective* emissivity of most tires ranges from approximately 0.75 to 0.90 in the 8 to 14 µm spectrum.

  - Generally, the emissivity should be lowered as the standoff distance (distance from tire to sensor) increases; this is particularly important with the 60˚ FOV sensor due to the larger standoff distances required. The suggested emissivity vs. standoff distance is shown in the graph below:

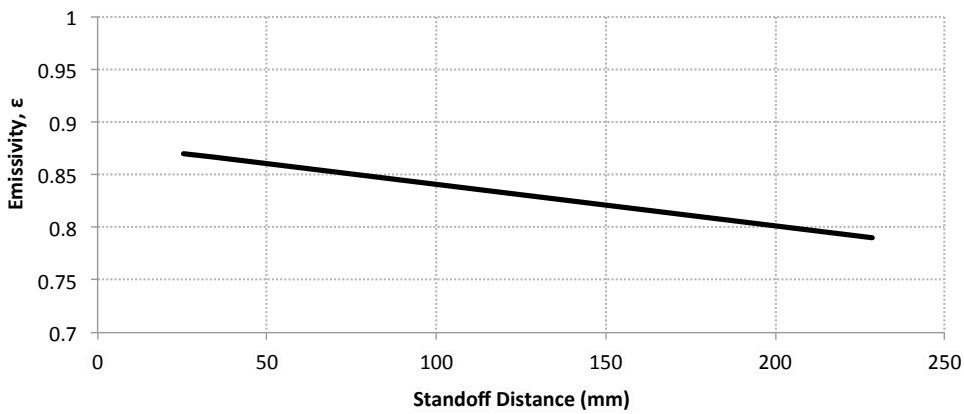

  - Lowering the emissivity increases the measured object temperature and vice versa

- Noise Equivalent Temperature Difference (NETD) increases with increasing sampling frequency:

  - Provided that tire surface temperature is highly transient, it is usually advantageous to use a higher sampling frequency at the cost of increased noise. A sampling frequency of 16 or 32 Hz is recommended for most applications.
  -